www.camlogic.it e-mail camlogic@camlogic.it

CAM LOGIC®

LEVEL GAUGES
vast range, long-lasting

PARTS IN CONTACT WITH THE PRODUCTS ARE MADE OF STAINLESS STEEL

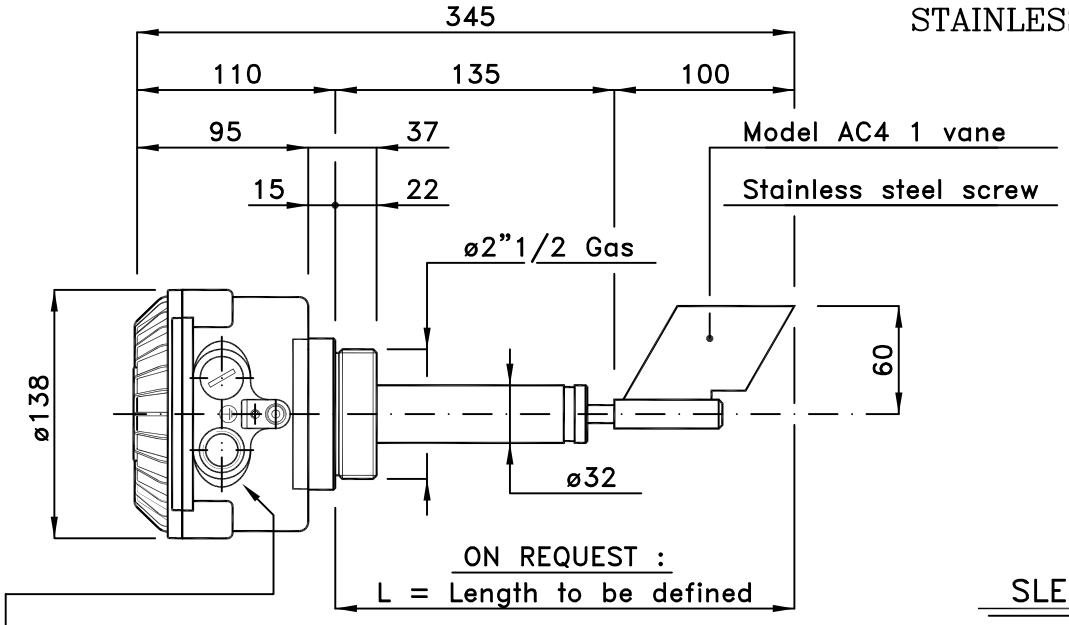

Cable inlet ø1/2" Gas – double horizontal on right side

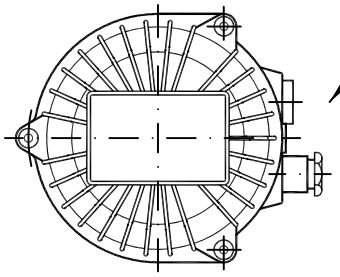

SLEEVE

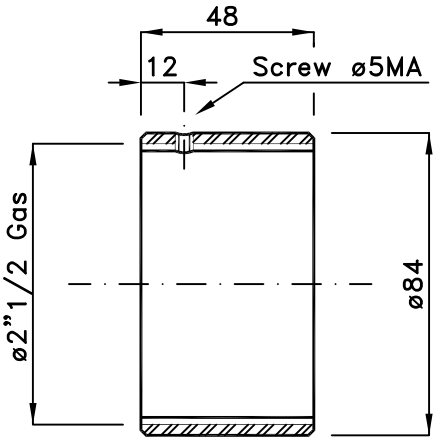

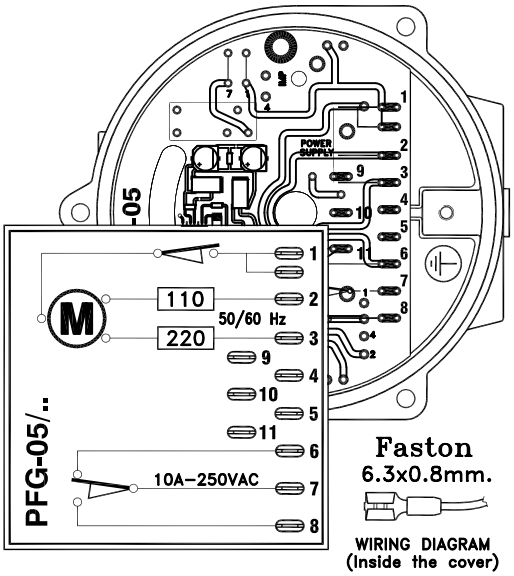

IP65 Protection

Certificate number TÜV IT 16 ATEX 063 X
Marking: Ex II 1/2 D Ex ta/tb IIIC T85°C IP65 Da/Db

WIRING

1 –	Common power supply
2 –	Power supply 110 Va.c. 50/60 Hz
3 –	Power supply 220 Va.c. 50/60 Hz
6 –	NC contact 10A/250 Va.c.
7 –	Common contacts
8 –	NO contact 10A/250 Va.c.

Ambient temperature range –20 to +70 °C

Weight : 2.900 Kg

On request power supply at 24/48 Va.c. 50/60 Hz or power supply at 24 Vd.c.

Electric motor draw 4 W

Maximum operational pressure 1.1 bar

BLADED LEVEL GAUGE PFG–05/X | D3861

Rev. 01